Product information sheet BLANCOCULINA-S II Mini

Item no. 527468

Benefits

- Iconic mixer tap combining exquisite design with semi-profunctionality
- Flexible metallic hose provides optimal range of motion
- Dual spray and integrated flow stop: easy switch between clear spray stream and powerful shower for highest functionality
- Comfortable locking of the hose with a hidden magnet holder
- Ideal in combination with wall cabinets
- Available in a variety of beautiful finishes

Colours

brass black matt

Available colours:
black matt

Scope of supply

- 180° swivel spout for greater reach
- Ø 35 mm tap hole required
- Easy and fast professional installation with BLANCOLock
- With ceramic disk cartridge
- Clear stream aerator
- Spray made of metal
- Magnetized handspray holder for ease of use
- Metal-sheathed spray hose
- Flexible connector pipes, 950 mm long and ⅜'' nut
- Stabilisation plate to increase the stability of the tap when fitted in stainless steel sinks
- With non-return valve and thus guaranteed against reflux in accordance with EN 1717

Details

Flow rate	8.22 l
Swivel range	180 °

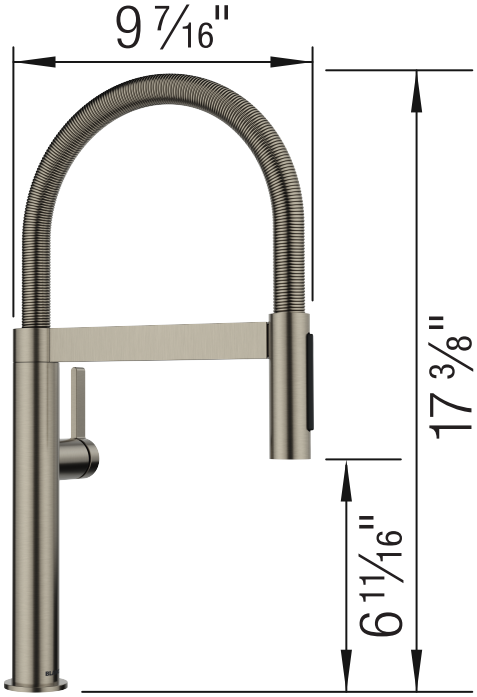

Side view

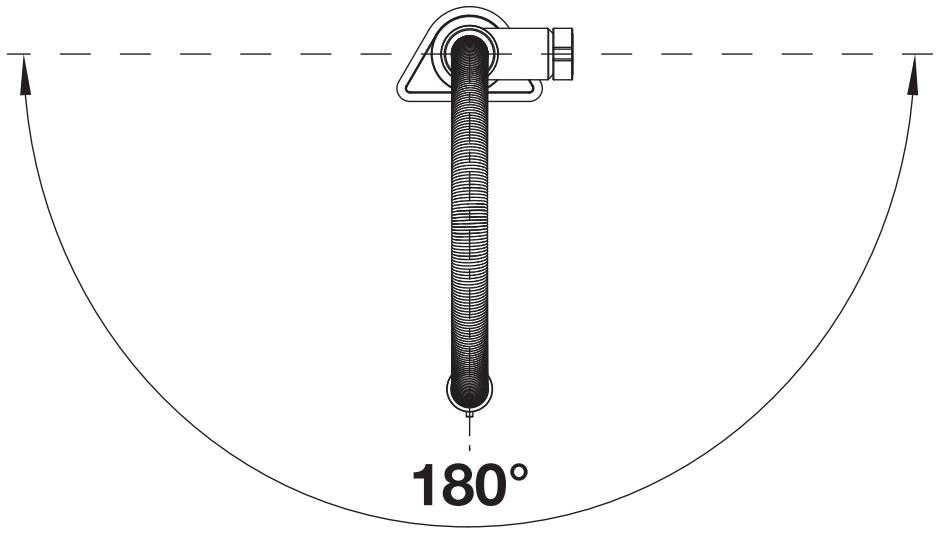

Swivel range

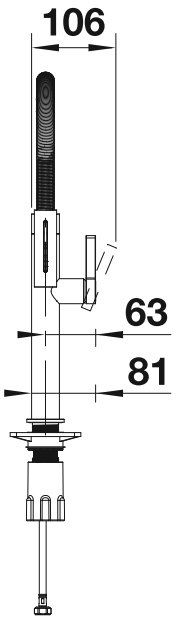

Side view lever